Technical data sheet

Product features

Fry-top griddle plate 116x51 electric chromed smooth without cabinet 400 V		
Model	**SAP Code**	00014876

- Worktop material: Super chrom
- Surface finish: SUPERCHROME - untreated chrome surface

SAP Code	00014876	**Net Weight [kg]**	99.00
Net Width [mm]	1200	**Power electric [kW]**	14.800
Net Depth [mm]	705	**Loading**	400 V / 3N - 50 Hz
Net Height [mm]	280	**Worktop type**	With removable containers - convenient maintenance, cleaning and service access

tel.: +420 381 582 284
e-mail: rmgastro@rmgastro.com
web: www.rmgastro.com

Technical data sheet

Technical drawing

Fry-top griddle plate 116x51 electric chromed smooth without cabinet 400 V		
Model	**SAP Code**	00014876

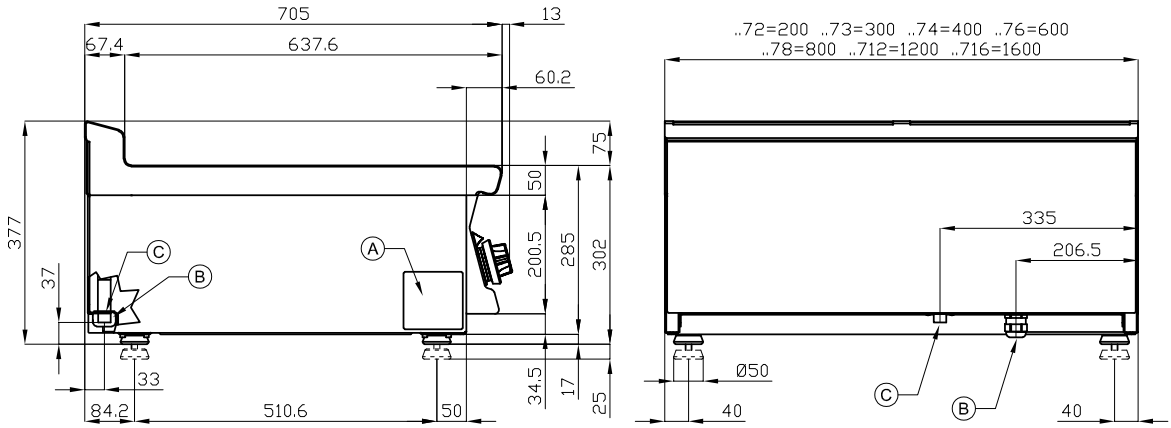

A	Data plate		B	Electrical connection	

tel.: +420 381 582 284
e-mail: rmgastro@rmgastro.com
web: www.rmgastro.com

Technical data sheet

Technical parameters

Fry-top griddle plate 116x51 electric chromed smooth without cabinet 400 V		
Model	**SAP Code**	00014876

1. **SAP Code:**
   00014876
2. **Article group:**
   Frying plates
3. **Net Width [mm]:**
   1200
4. **Net Depth [mm]:**
   705
5. **Net Height [mm]:**
   280
6. **Net Weight [kg]:**
   99.00
7. **Gross Width [mm]:**
   1230
8. **Gross depth [mm]:**
   770
9. **Gross Height [mm]:**
   540
10. **Gross Weight [kg]:**
    114.00
11. **Device type:**
    Electric unit
12. **Construction type of device:**
    Table top
13. **Power electric [kW]:**
    14.800
14. **Loading:**
    400 V / 3N - 50 Hz
15. **Protection of controls:**
    IPX5
16. **Device color:**
    Stainless steel
17. **Material:**
    AISI 304 top plate and cladding
18. **Worktop type:**
    With removable containers - convenient maintenance, cleaning and service access
19. **Worktop material:**
    Super chrom
20. **Worktop Thickness [mm]:**
    2.00
21. **Surface finish:**
    SUPERCHROME - untreated chrome surface

tel.: +420 381 582 284
e-mail: rmgastro@rmgastro.com
web: www.rmgastro.com