Technical data sheet

Product features

Vacuum packing machine 25 m3/h, 520 mm		
Model	**SAP Code**	00013554

- Vacuum pump power [m3/h]: 25
- Length of sealing bar [mm]: 520
- Width of internal part [mm]: 530
- Depth of internal part [mm]: 530
- Height of internal part [mm]: 210
- Control type: Digital
- Gas flush: No
- Number of programs: 10
- Sealing time adjustment: Yes
- Vacuum time adjustment: Yes
- Lid security element: Yes
- Manometer: Yes

SAP Code	00013554	**Loading**	230 V / 1N - 50 Hz
Net Width [mm]	605	**Vacuum pump power [m3/h]**	25
Net Depth [mm]	655	**Length of sealing bar [mm]**	520
Net Height [mm]	1050	**Width of internal part [mm]**	530
Net Weight [kg]	97.50	**Depth of internal part [mm]**	530
Power electric [kW]	0.900	**Height of internal part [mm]**	210

tel.: +420 381 582 284
e-mail: rmgastro@rmgastro.com
web: www.rmgastro.com

Technical data sheet

Technical drawing

Vacuum packing machine 25 m3/h, 520 mm		
Model	**SAP Code**	00013554

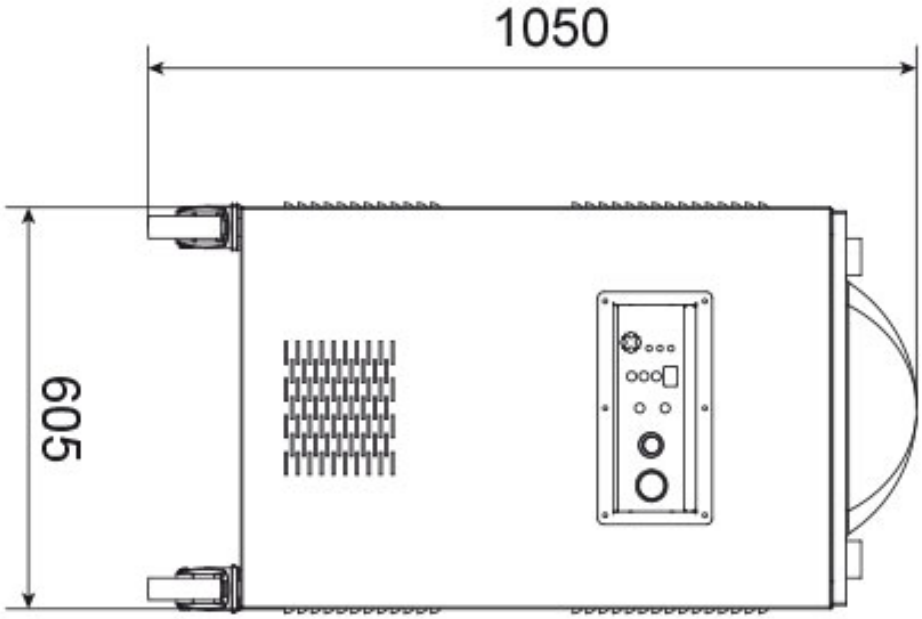

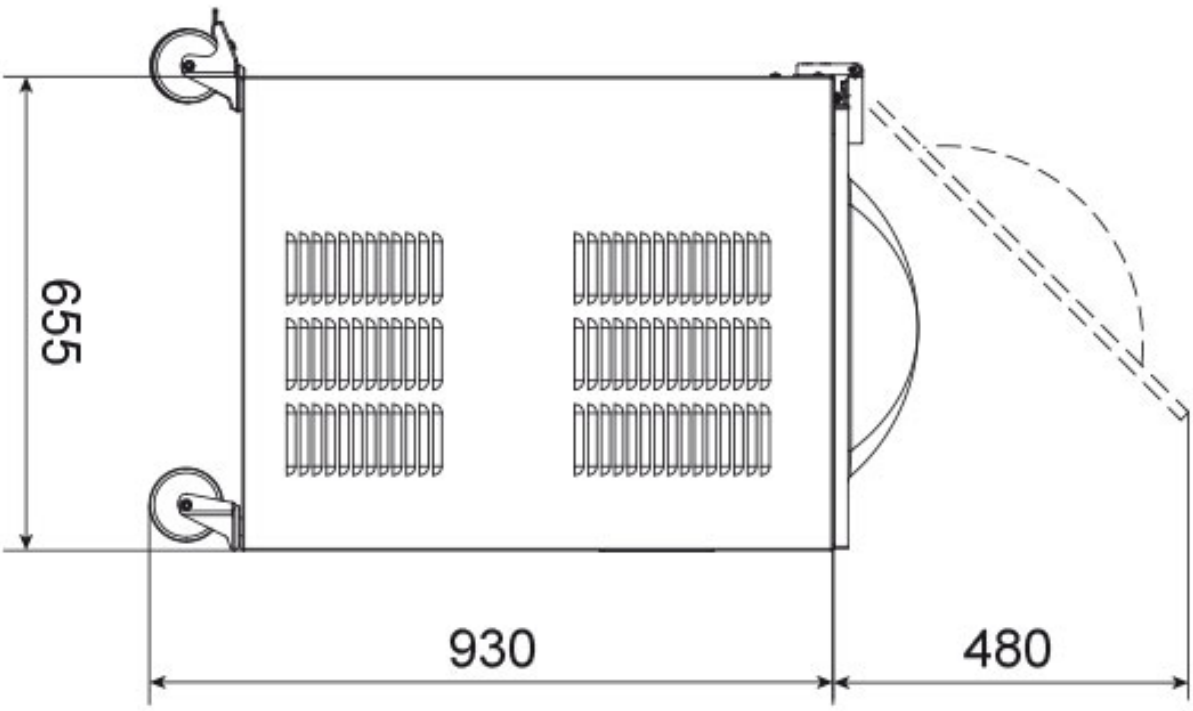

tel.: +420 381 582 284
e-mail: rmgastro@rmgastro.com
web: www.rmgastro.com

Technical data sheet

Product benefits

Vacuum packing machine 25 m3/h, 520 mm		
Model	**SAP Code**	00013554

1 **Adjustable welding time**

tighter packaging closure

- greater security of closure
- less error in operation

2 **Convex plexiglass cover**

greater variability of vacuuming

- possibility to vacuum larger quantities at once

3 **Stainless steel chamber**

endurance
easy maintenance

- easy to maintain thanks to the stainless steel chamber
- hygienic cleanliness

4 **Softair slow return of air to the chamber**

care for the product and the bag

- softair eliminates the risk of damage to the bag and the vacuumed food, thus saving costs

5 **Rubber feet**

vibration elimination

- nižší hlučnost zařízení
- prodloužení životnosti

tel.: +420 381 582 284
e-mail: rmgastro@rmgastro.com
web: www.rmgastro.com

Technical data sheet

Technical parameters

Vacuum packing machine 25 m3/h, 520 mm		
Model	**SAP Code**	00013554

1. **SAP Code:**
   00013554
2. **Article group:**
   Vacuum packs
3. **Net Width [mm]:**
   605
4. **Net Depth [mm]:**
   655
5. **Net Height [mm]:**
   1050
6. **Net Weight [kg]:**
   97.50
7. **Gross Width [mm]:**
   800
8. **Gross depth [mm]:**
   1000
9. **Gross Height [mm]:**
   1300
10. **Gross Weight [kg]:**
    126.00
11. **Device type:**
    Electric unit
12. **Material:**
    Stainless steel
13. **Power electric [kW]:**
    0.900
14. **Loading:**
    230 V / 1N - 50 Hz
15. **Control type:**
    Digital
16. **Safety cover:**
    transparent plexiglass
17. **Safety element:**
    lid opening fuse
18. **Main switch:**
    Yes
19. **Timer:**
    Yes
20. **Gas flush:**
    No
21. **Vacuum pump power [m3/h]:**
    25
22. **Length of sealing bar [mm]:**
    520
23. **Number of programs:**
    10
24. **Sealing time adjustment:**
    Yes
25. **Vacuum time adjustment:**
    Yes
26. **Lid security element:**
    Yes
27. **Manometer:**
    Yes
28. **Width of internal part [mm]:**
    530

tel.: +420 381 582 284
e-mail: rmgastro@rmgastro.com
web: www.rmgastro.com

Technical data sheet

Technical parameters

Vacuum packing machine 25 m3/h, 520 mm		
Model	**SAP Code**	00013554

29. Depth of internal part [mm]:
530

30. Height of internal part [mm]:
210

tel.: +420 381 582 284
e-mail: rmgastro@rmgastro.com
web: www.rmgastro.com