RM 900
Platný od 1.5. 2019
CWT-94G, CWT-98EG

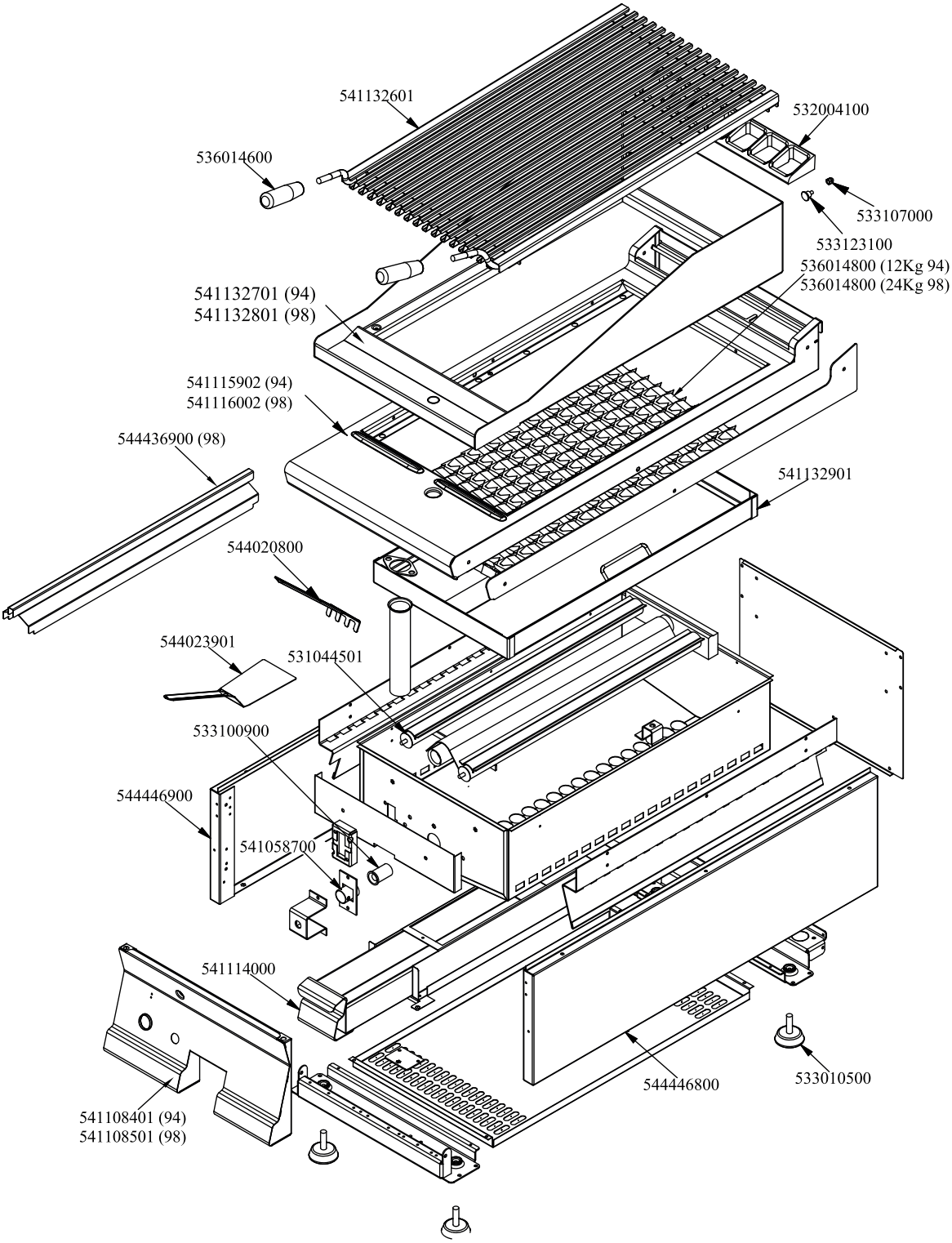

Objednací kód	Popis v ENG
544436900	CENTRAL TOP FOR SPLASH GUARD CW98
541108501	
536014800	LAVASTONE
533010500	LEG M10*25 D.40
544446800	
532004100	FLUE GRID L=370 90LINE (RAF)
541132901	STONE SUPPORTING FRAME CW-94G
544023901	SPATTLE FOR FRY-TOP
536014600	GRIP D.28*90*M10 CW
541132601	"S" GRID FOR CW-94
541114000	DRAINER DRAWER CW-G 90LINE
544446900	LHD SIDE FOR 90T APPLIANCES
541116002	
541058700	BURNER COUPLING BUSHING CW-G
533100900	AIR ADJUSTMENT BUSHING D22 EST.H38
531044501	BURNER CW-G 90 LINE
544020800	SPATTLE FOR CW S70 S90
541132801	SPLASH SHIELD CW-98
533123100	PROCESSING CODE
533107000	PROCESSING CODE

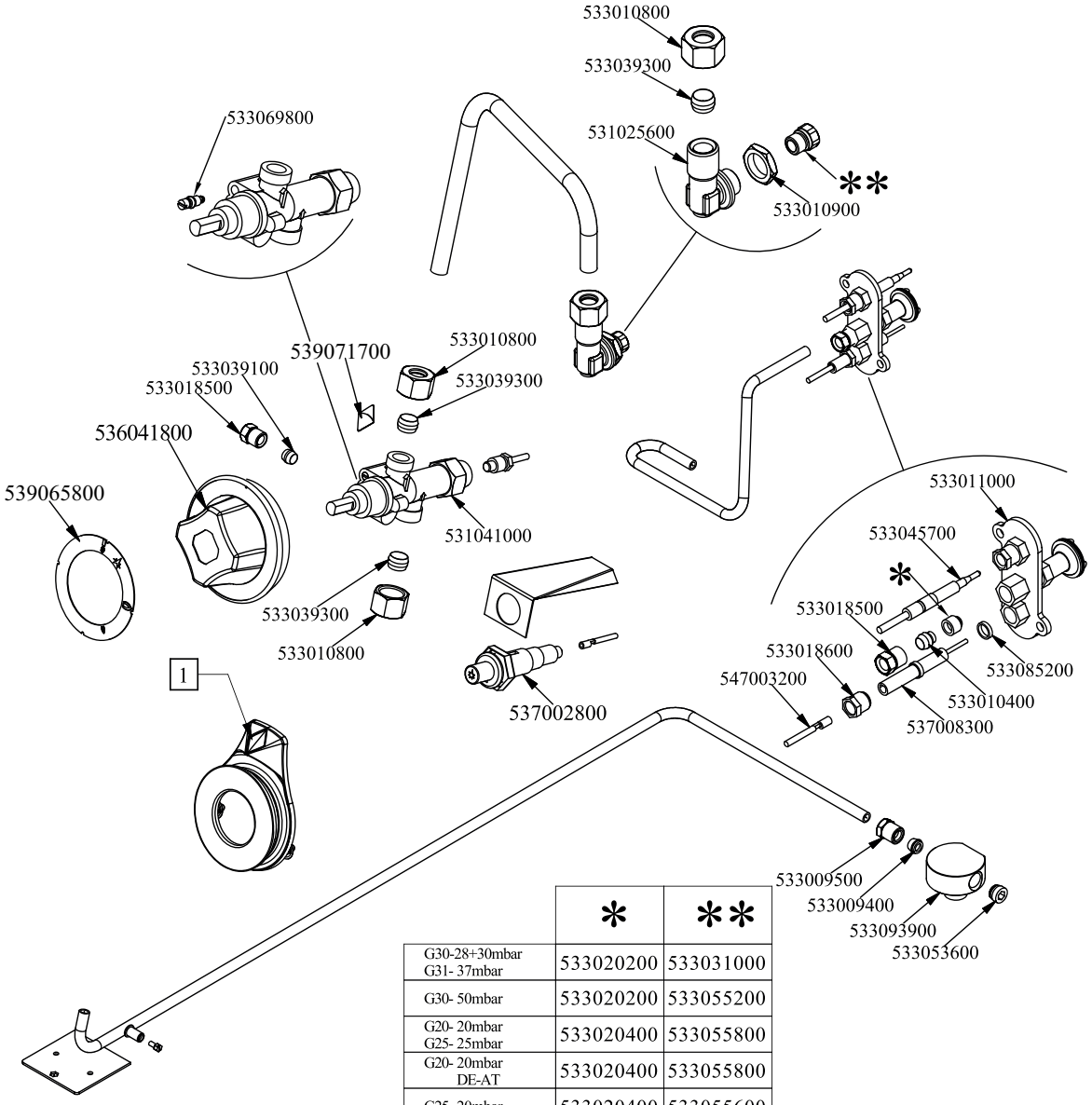

	*	**
G30-28+30mbar G31- 37mbar	533020200	533031000
G30- 50mbar	533020200	533055200
G20- 20mbar G25- 25mbar	533020400	533055800
G20- 20mbar DE-AT	533020400	533055800
G25- 20mbar	533020400	533055600
G25- 25mbar NL	533020400	533055900

560063301M00P00

Objednací kód	Popis v ENG
533069800	BY PASS COCK §110 20S-21S
533010800	TUBE NUT D.10 M16*1,5
533039300	BICONE §10
539071700	ADHES.LABEL FOR RING GREEN SIGN.
533018500	FITTING FOR BICONE D.6 M10*1
533039100	BICONE §6
531025600	ELBOW 90° NOZZLE-HOLDER §10 PIPE
533010900	NUT M14*1 H.4
533011000	PILOT BURNER 3 FLAMES 320
533018600	PLUG FITTING
547003200	HIGH-VOLTAGE CABLE TUBE.§2 L=500
537008300	ROUND PLUG §2,4- LONG ELECTRODE
533010400	BICONE D.6
533085200	SPACER FOR PILOT PLUG
533045700	THERMOCOUPLE M9*1 500
531041000	SAFETY TAP 21S-B
537002800	PIEZOELECTRIC IGNITION M18 WITH NUT
533053600	EUROSIT VALVE PLUG
533093900	FITTING GAS ENTRY 1/2G 2OUT 3/8G
533009400	BICONE 10S
533009500	NIPPLE FOR BICONE 10S
539065800	BLACK STICKING DISK 72
536041800	SILVER CHROM. KNOB Ø77 4P.G.Ø08X6,5
533020200	PILOT JETS 0160 FOR LPG §30
533020400	NOZZLE 0160 (NATURAL GAS) 51
533031000	NOZZLE §175 CH12X14
533055200	NOZZLE §153 CH12*14 M/L-FQ/P65
533055800	NOZZLE CH12X14,0 Ø250
533055600	NOZZLE §280 CH12*14
533055900	NOZZLE CH12X14,0 Ø265
-	-

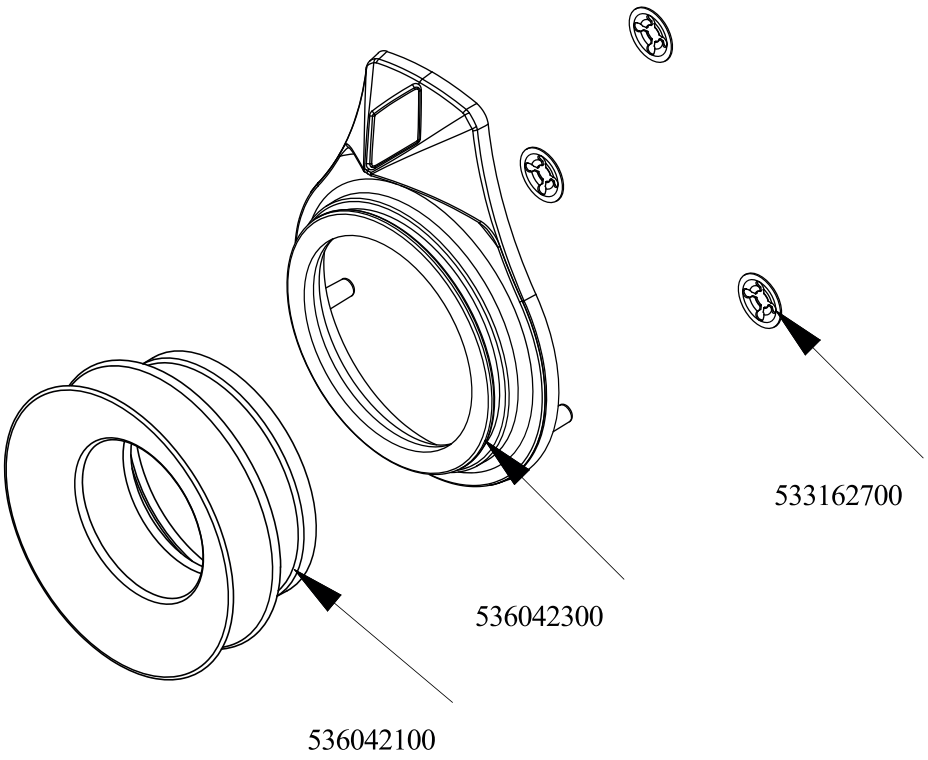

560125700M00P00

Objednací kód	Popis v ENG
536042300	SILVER CHROM. RING FOR KNOB Ø77 4 P
536042100	SEAL CASING FOR KNOB Ø77 4 P
533162700	PROCESSING CODE